REACH & RoHS COMPLIANT

| REV. 版本 | ECN NO. 变更说明 | DATE 日期 |
|---|---|---|
| A | FIRST DESIGN | 23.10.09 |

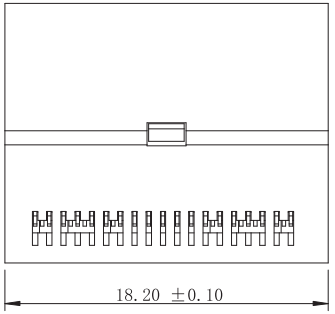


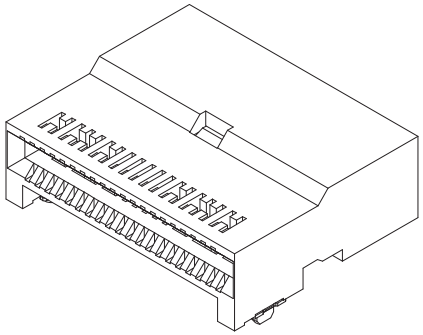

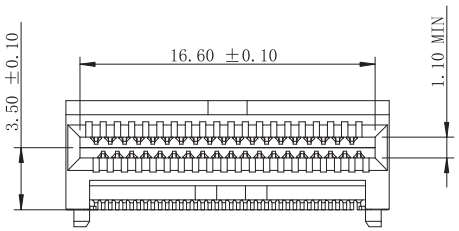


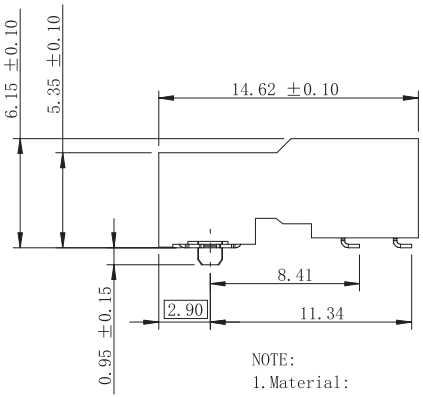


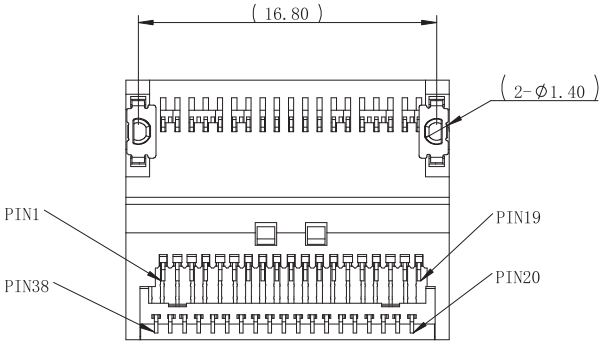


NOTE:
1.Material:
HOUSING: HIGH TEMERATURE LCP,BLACK,UL 94 V-0 FLAME RETARDANT.
2. TERMINAL : NICKEL COPPER ALLOY
PLATING SPEC AS BELOW:
OPTION 1
CONTACT AREA PLATE NICKEL 1.27um MIN,PLATE Gold 0.38um MIN
SOLDER AREA PLATE NICKEL 1.27um MIN,PLATE MATT TIN 1.5~4.5um
OPTION 2
CONTACT AREA PLATE NICKEL 1.27um MIN,PLATE Gold 0.76um MIN
SOLDER AREA PLATE NICKEL 1.27um MIN,PLATE MATT TIN 1.5~4.5um
3.ELELCTRICAL CHARACTERISTICS
CONTACT CURRENT RATING:1.5AMPERE
VOLTAGE RATING:30V DC
CONTACT RESISTACE:50 MILLOHMS MAX
DIELECTRIC WITHSTANDING VOLTAGE:300V AC
4.ENVIRONMEENT
OPERATION TEMPERATURE:-40° C TO 85° C


VOOHU 苏州沃虎电子科技有限公司
Su Zhou Voohu Electronic Tech.Co.Ltd
TEL: +86 400 1048 018
WEB: WWW.WOHU-TEK.COM


| TITLE: | SIZE | UNITS | GENERAL TOLERANCES UNLESS SPECIFIED | | APPROVED BY: |
|---|---|---|---|---|---|
| QSFP112 1X1 CONNECTOR 0.8PITCH | A4 | MM[INCH] | | | Geoffrey.Song |
| PART NO.: WHSFP51311D002 | SCALE 1:1 | REV A0 | x±0.35 / .x±0.30 | x°±3.0° / .x°±2.0° | CHECKED BY: Elvis.Song |
| REMARK: GOLD PLATING 0.38um | SHEET 1/2 | | .xx±0.25 / .xxx±0.10 | .xx°±1.5° / .xxx°±1.0° | DESIGNED BY: Sunny.Xu |

REACH & RoHS COMPLIANT

| REV. 版本 | ECN NO. 变更说明 | DATE 日期 |
|---|---|---|
| | | |

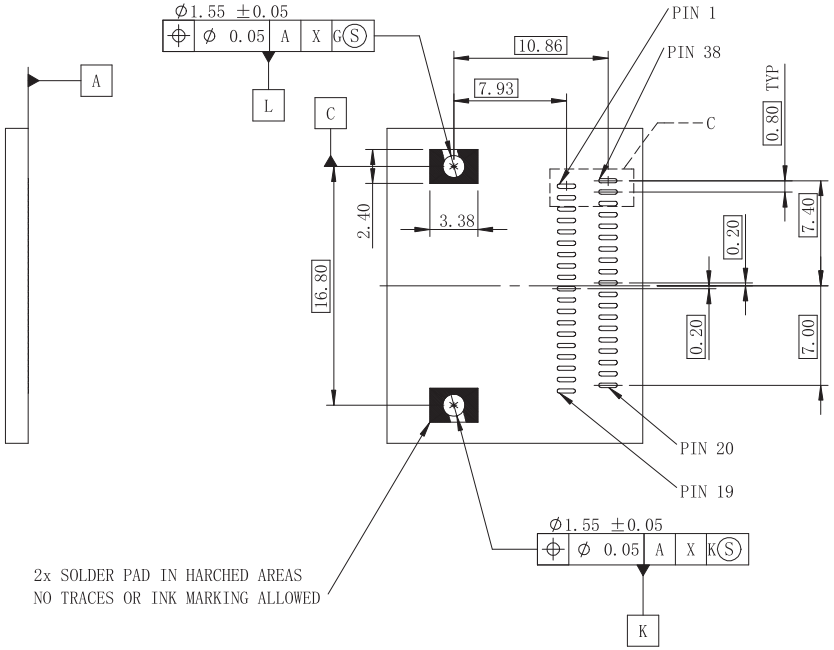


RECOMMENDED PCB DIMENSION TILERANCE±0.05

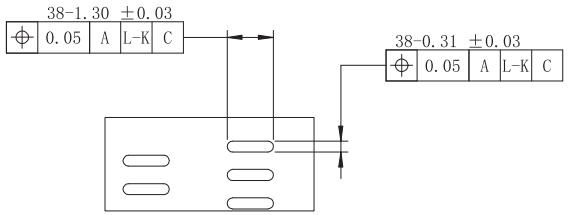


局部视图 C
比例 5 : 1

| | | | | | |
|---|---|---|---|---|---|
| 苏州沃虎电子科技有限公司 Su Zhou Voohu Electronic Tech.Co.Ltd | TITLE: QSFP112 1X1 CONNECTOR 0.8PITCH | SIZE A4 | UNITS MM[INCH] | GENERAL TOLERANCES UNLESS SPECIFIED | APPROVED BY: Geoffrey.Song |
| | PART NO.: WHSFP51311D002 | SCALE 1:1 | REV A0 | x±0.35 / .x±0.30 / .xx±0.25 / .xxx±0.10 — x°±3.0° / .x°±2.0° / .xx°±1.5° / .xxx°±1.0° | CHECKED BY: Elvis.Song |
| TEL: +86 400 1048 018 / WEB: WWW.WOHU-TEK.COM | REMARK: GOLD PLATING 0.38um | SHEET 2/2 | | | DESIGNED BY: Sunny.Xu |